REV	ZONE	ECN	REVISION DESCRIPTION	DATE	ENG
A	...	...	Released	06/04	PA
B	...	...	Added Section View/Dimensions	04/18	PA/PD

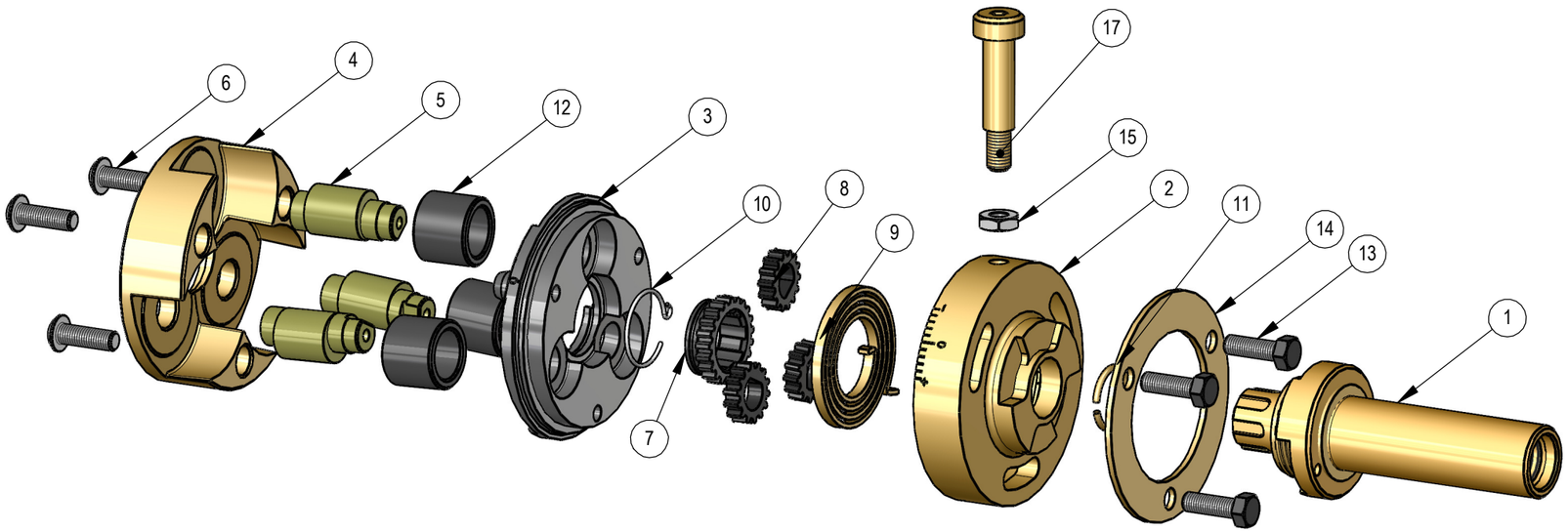

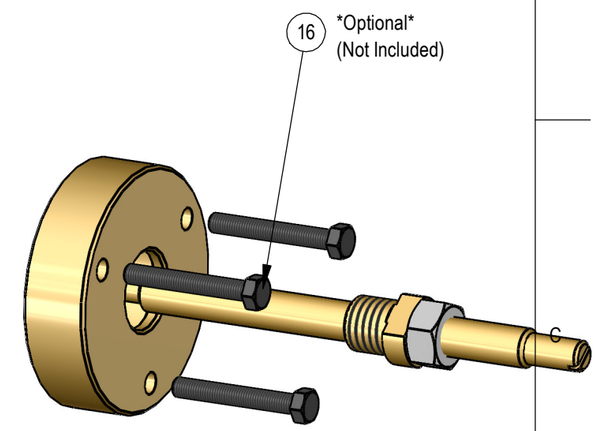

ITEM NO.	PART NUMBER	DESCRIPTION	QTY.
1	190001	Shaft	1
2	190002	Spring Housing	1
3	190003	Center Plate	1
4	190004	Front Plate	1
5	190005	Eccentric Roll Pin	3
6	190006	Screw: BHCS, M5 x 0.8 x 16 mm	3
7	190007	Center Gear	1
8	190008	Eccentric Gear	3
9	190010	Spring: Tapered Coil, 1.80 OD x 1.250 OAL x 60 deg	1
10	190011	Ring: Retaining, .768 ID x .032	1
11	190012	Ring: Retaining, .625 OD x .060	1
12	190013	Carbide Roll Bushing	3
13	190015	Bolt: Hex, M5 x 0.8 x 16 mm	3
14	190016	Washer (Ring Style)	1
15	190017	Nut: Jam, M6 x 1.0	1
16	190027	Internal Trip Mechanism (Optional)	1
17	190032	Screw: SHSS, M6-1.0X25mm	1
18	W901.5EA1	M10x1.5x.590,ES1L,Winter 190	4
19	190028	Lock Up Plate	1
20	190029	Bolt: Hex, M5 x 0.8 x 16 mm	3

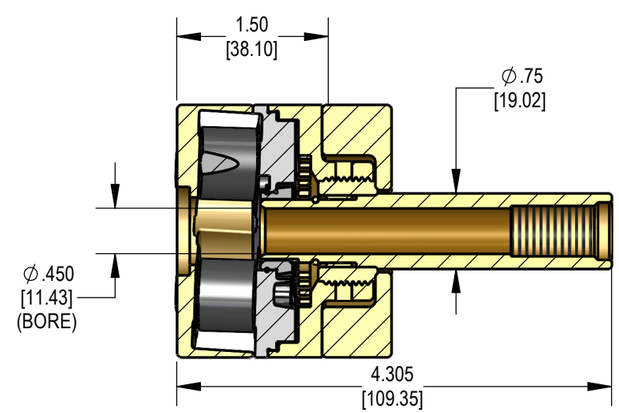

SECTION A-A

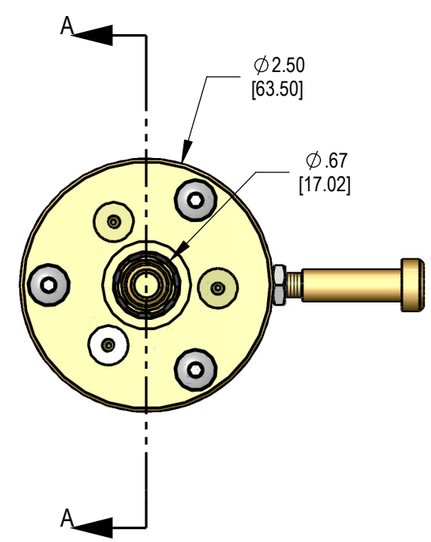

THIS DRAWING IS THE CONFIDENTIAL AND EXCLUSIVE PROPERTY OF C.J. WINTER MACHINE TECHNOLOGIES, INC. AND MAY NOT BE COPIED, REPRODUCED, OR DISCLOSED IN ANY WAY, WHATSOEVER TO ANYONE WITHOUT THE EXPRESS WRITTEN PERMISSION OF C.J. WINTER MACHINE TECHNOLOGIES, INC UNLAWFUL DISCLOSURE MAY RESULT IN PROSECUTION

UNLESS OTHERWISE SPECIFIED: DRAWING MUST COMPLY TO C. J. WINTER ENGINEERING STANDARD E1058 & ASME Y14.5M 1994. UNTOLERANCED DIMENSIONS ARE BASIC

⌓	.020	A	B	C	SW

DRAWN BY: D. Cole
DWG DATE: 12/12/03
ENG. APPR: P. Allart
APPR DATE:12/12/03
MATERIAL:
HEAT TRT:

C. J. WINTER MACHINE TECHNOLOGIES, INC.

End Rolling Attachment (.750 Dia Shank)

DWG SIZE: B
SCALE: 2:3
SHEET 1 OF 1
DRAWING NO. 190 ER-01